DW882 STRAIGHT GRINDER 1

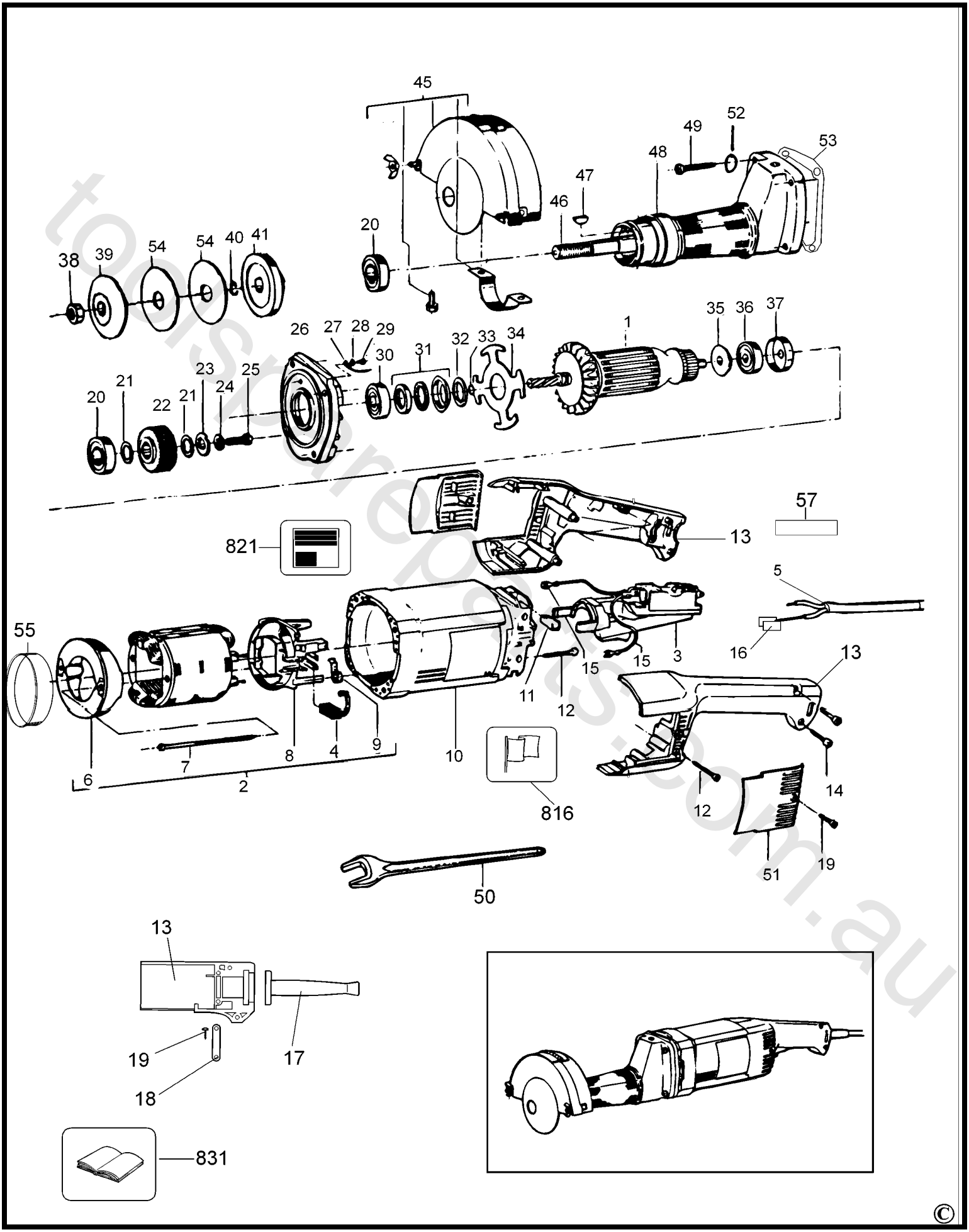

©